Translation of the original manual

english

Dermat
info@dermat.be
www.dermat.be

Elma Dry

Hot air dryer

Item No. 1083106

Version 2
05/2023

Copyright © 2023 Elma Schmidbauer GmbH. All rights reserved.

Elma Schmidbauer GmbH
Gottlieb-Daimler-Strasse 17
78224 Singen (Germany)
www.elma-ultrasonic.com

Technical support:
Tel: + 49 (0)77 31 882 280
Email: support@elma-ultrasonic.com

Subject to technical and visual modifications.

Contents

1 General ... 4
1.1 About this manual ... 4
1.2 CE compliance ... 4
2 Proper use ... 5
3 Performance specification ... 5
4 Technical data ... 6
5 Product contents ... 7
5.1 Optional accessories ... 7
6 Unit description ... 8
7 General safety instructions ... 11
7.1 The structure of warnings ... 11
7.2 Meaning of the symbols used ... 11
7.3 Safety information on the unit ... 12
7.4 Safety information on using the unit ... 12
8 Unpacking and mounting the unit ... 12
9 Connecting the power cord ... 13
9.1 Performance specification ... 14
10 Operating the unit ... 15
11 Maintenance ... 16
11.1 Cleaning the unit ... 16
11.2 Changing or cleaning the dust filter ... 17
12 Troubleshooting ... 18
13 Disposal ... 18

1 General

1.1 About this manual

NOTICE

Please read the manual before using the product.

This manual forms part of the contents supplied with the unit. Keep the manual in an accessible place close to the product and keep it with the product if it is sold on.

Meaning of the symbols used:

- ● This symbol denotes lists.
- ✓ This symbol denotes requirements.
- 1. Numbers with a dot denote actions.
- ○ This symbol denotes individual actions.
- ⇨ This symbol denotes interim results.
- ➔ This symbol denotes the result of your action.
- 1 Numbers without a dot denote image labels.

1.2 CE compliance

This unit meets the CE marking criteria.

The compliance declaration can be requested from the manufacturer.

If the unit is opened by unauthorised electricians, it will no longer be CE compliant.

Technical changes to the unit must be approved by the manufacturer.

2 Proper use

NOTICE

Only use the unit in accordance with the listed specifications.

Using the unit in any other way is considered improper use.

- ➢ The purpose of the unit is to dry objects after wet cleaning.
- ➢ It is suitable for drying clock movements, metal strips, clock parts, large silverware and enclosures.
- ➢ Do NOT dry objects with solvents on them.
- ➢ The unit is only intended for use in commercial applications.
- ➢ Only authorised specialist personnel who are familiar with this manual may use this unit. Unauthorised persons, in particular children, must not use this unit.
- ➢ Only use accessories made for this unit.
- ➢ Do not dry living creatures in the unit.

3 Performance specification

- Drying objects with warm or cold air
- Max. drying temperature 70 °C
- Temperature of the cold air: room temperature
- Automatic safety switch-off at excessive temperature
- Quick and easy to operate using the rocker switch with three positions: OFF, HOT (hot air), COLD (cold air)
- Dust filter (replaceable) prevents dust in the ambient air from re-contaminating the item
- Cooling unit plug-in connection: optimum mobility since the power cord on the unit can be unplugged
- Lid saves energy and creates effective flow turbulence to ensure the item is fully dried
- Stainless steel enclosure, protected against dripping water
- Suitable for use with different stainless steel basket sizes

4 Technical data

Elma Dry	30	120	300
Mechanical data			
Tank internal dimensions W/D/H (approx. in mm)	240/137/100	300/240/200	505/300/200
Unit external dimensions W/D/H (mm)	300/186/219	362/285/322	568/347/322
Weight (kg)	3.6	6.1	10.2
Maximum load (kg)	1	7	12
Mesh width of wire mesh (mm)	2	2	2
Wire diameter of wire mesh (mm)	0.63	0.63	0.63
Material (tank/enclosure)	Chrome steel	Chrome steel	Chrome steel
Electrical data			
Mains voltage ±10% (V~)	100–120/220–240		
Mains frequency (Hz)	50/60		
Max. heating power at 120 and 240 V (W)	580	730	1460
Max. power at 120 and 240 V (W)	600	750	1,500
Max. temperature (C°)	70	70	70
Heating time (min.)	~15	~15	~15
Air output max. (m^3/h)	160	160	320
Ambient conditions			
Max. perm. altitude in operation (m (NHN)	+2,000		
Overvoltage category	II		
Degree of contamination	2		
Accessories			
Suitable basket sizes	1 x 30	2 x 30/40 1 x 100/120	3 x 60 1 x 60 + 1 x 100/120 2 x 100/120 1 x 150/300

5 Product contents

Illustration 1: Product contents Elma Dry

1	Cover
2	Power cord
3	Elma Dry
4	Manual (not pictured)

5.1 Optional accessories

- **Silicon mat** to place on the bottom of the tank, prevents scratching of parts
- **Stainless steel basket** in different sizes, for easy loading and unloading of the unit

6 Unit description

Illustration 2: Front of Elma Dry

1 **Lid** to cover the unit, or as a place to temporarily stand a stainless steel basket

2 **Handle** for transporting

3 **Foot**

4 **Rocker switch** for switching hot or cold air on or off

5 **Elma Dry**

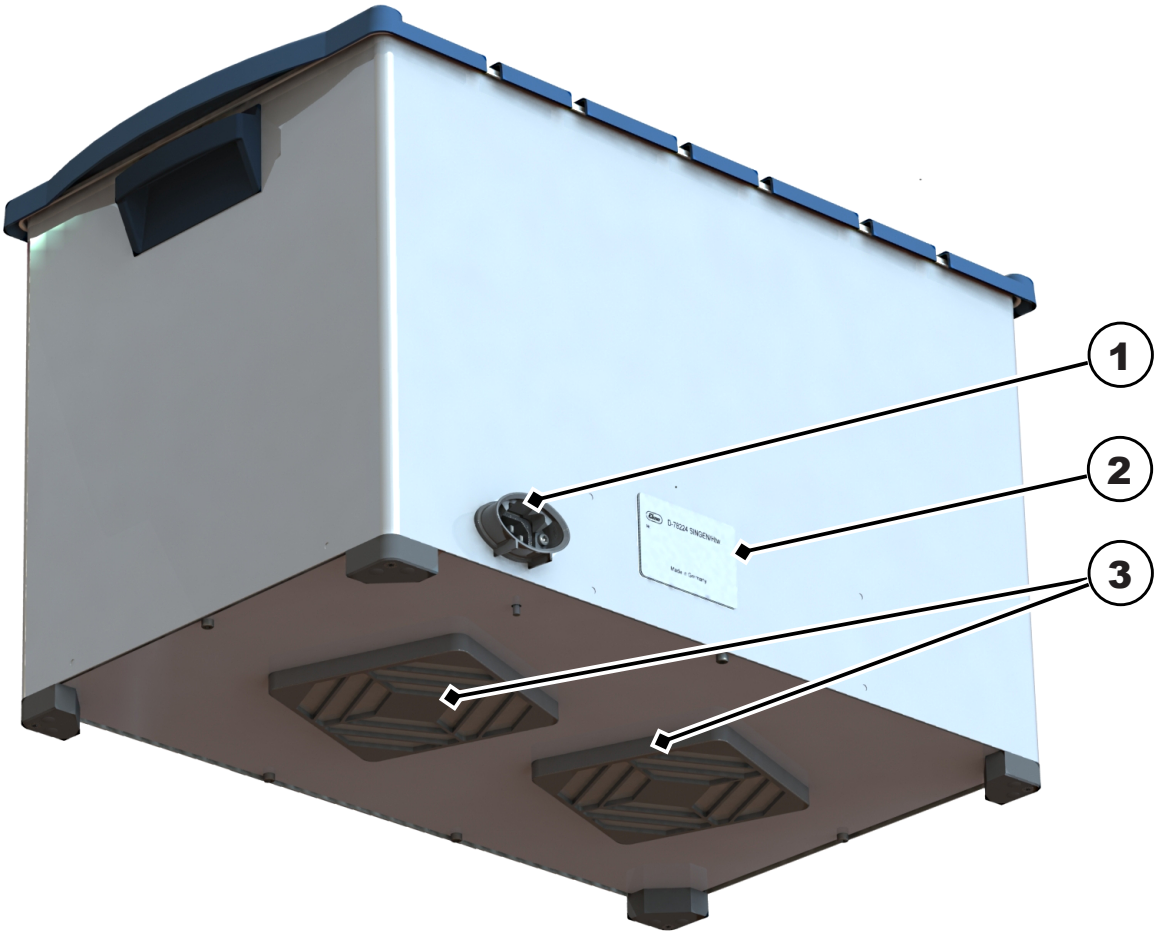

Illustration 3: Rear of Elma Dry

1 **Mains connection** for connecting with the power cord

2 **Name plate** shows the technical specifications for the unit

3 **Dust filter** (replaceable) prevents dust from getting into the tank through the blower

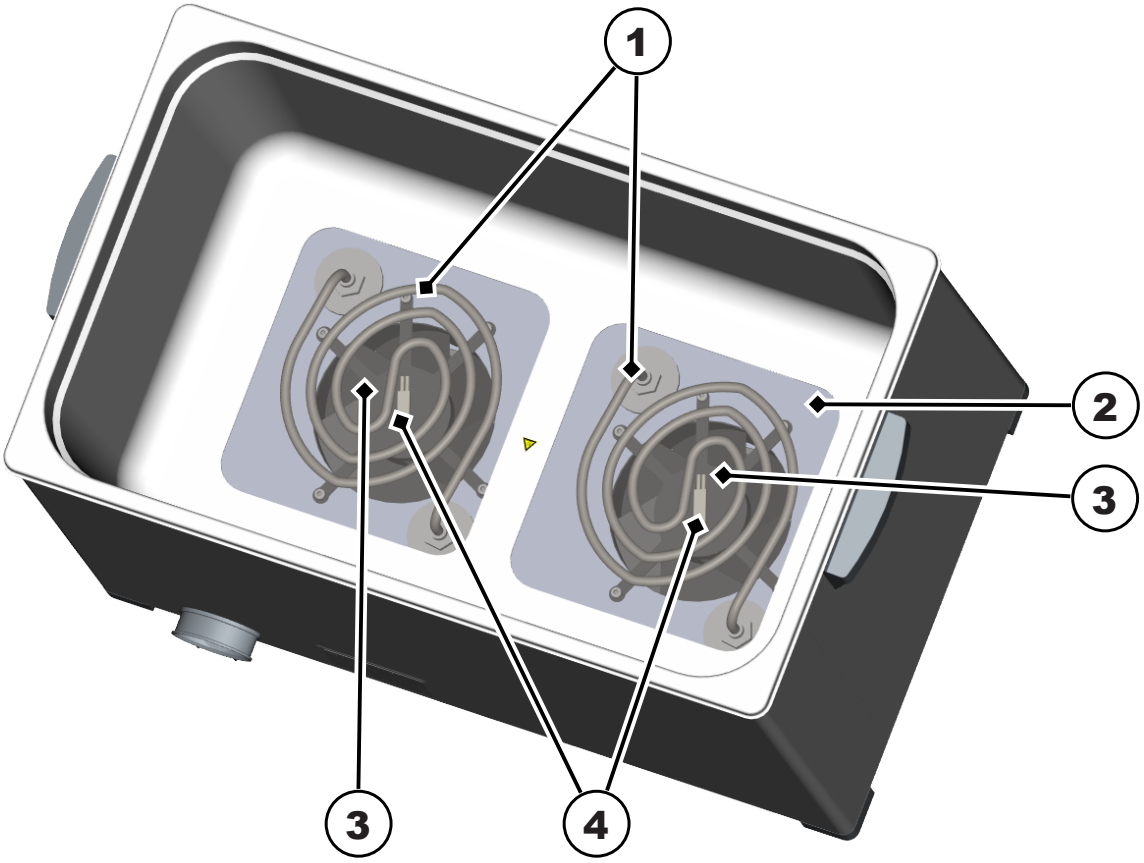

Illustration 4: Dryer tank of Elma Dry

1 **Tubular heater** for heating the air

2 **Wire mesh** for protection of the blower system

3 **Blower** generates a stream of air to dry the parts

4 **Over-temperature fuse** switches off the heating if the temperature becomes too high (not visible in the unit)

7 General safety instructions

7.1 The structure of warnings

SIGNALWORD

Type and source of the danger

Possible consequences of the danger if disregarded.

➢ Measures to prevent the danger.

Signal word	Meaning	Consequences if disregarded
DANGER	Immediate danger	Death or serious injury
WARNING	Possible dangerous situation	Death or serious injury
CAUTION	Possible dangerous situation	Slight injuries, damage to components or units
NOTICE	Useful advice or tip	No risk of personal injury, but possible damage to components or units

Table 1: Meaning of the signal words

7.2 Meaning of the symbols used

Symbols on the unit:	
	Read the manual
	Hot surfaces
Symbols in the manual:	
	Risk of electric shock
	Risk of explosion due to oxidising substances

	Note about damage to unit, or tip
	Disposal information

7.3 Safety information on the unit

CAUTION

Hot surfaces

Burns

- Allow unit, stainless steel basket and objects to cool down.
- Only touch hot surfaces or objects with suitable gloves.

7.4 Safety information on using the unit

DANGER

No explosion protection

Critical injuries, burns

- Do not place the unit near flammable substances.
- Do not dry objects with solvent adhered to them (alcohol, benzine etc.).

DANGER

Liquid ingress

Electric shock

- Do not immerse unit in water or rinse it under running water.
- Make sure that no water enters the unit.
- If the unit becomes damaged or water gets into it, disconnect it immediately from the power supply by pulling out the plug.

8 Unpacking and mounting the unit

CAUTION

Transport damage

Electric shock

- Do not put the unit and power cord into operation if they are damaged.
- Contact the supplier or the shipper.

NOTICE

The packaging protects the unit from transport damage. If the packaging is damaged, we recommend you take a photograph of the damage.

- Keep the packaging for servicing purposes.
- Only dispose of it in accordance with the applicable disposal guidelines.
- The packaging can be sent back to the manufacturer.

NOTICE

Permissible ambient conditions

Incorrect ambient conditions lead to damage to the unit.

- Permissible ambient temperature: +5 °C to +40 °C (41–104 °F)
- Permissible relative humidity: max. 80%
- Condensation must not form on the enclosure. Do not expose the unit to any extreme temperature changes.
- Only use the unit indoors.
- The supporting surface must not be soft, as this will block the air inlets.

1. Remove the packaging from the unit.
2. Check that all the contents are present.
3. Check the unit and the power cord for damage.
4. Place the unit on a stable, even and dry surface.
   ⇨ **NOTE! Do not cover the air inlets on the underside of the unit.**

➔ The power cord can be connected.

9 Connecting the power cord

DANGER

Mains voltage

Serious injuries or death from electric shock

- Only use the original power cord.
- Check the power cord for damage. Do not use a damaged power cord.
- Choose an accessible socket. In emergencies, pull the plug out of the socket or the unit.
- Keep the supporting surface and the enclosure dry.
- The information on the name plate must match the electrical operating conditions (particularly mains voltage and connected load).
- Connect the unit to a suitable earthed safety socket.
- Only operate the unit in power circuits that are protected by a fault-current circuit breaker.

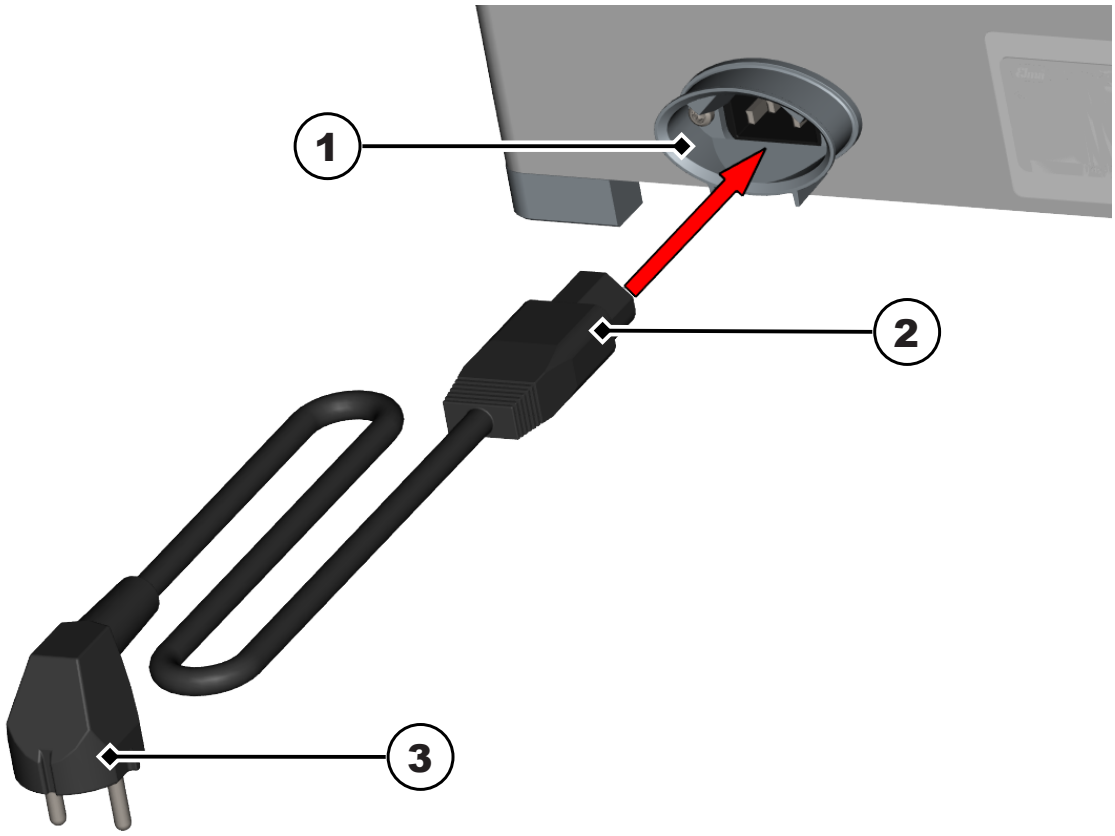

✓ The unit has been unpacked.
✓ The unit has been set up.

1. Connect the power cord (2) to the mains connection (1) on the unit.
2. Plug the mains plug (3) into a suitable socket.

➔ The unit is ready to use.

9.1 Performance specification

- Drying objects with warm or cold air
- Max. drying temperature 70 °C
- Temperature of the cold air: room temperature
- Automatic safety switch-off at excessive temperature
- Quick and easy to operate using the rocker switch with three positions: OFF, HOT (hot air), COLD (cold air)
- Dust filter (replaceable) prevents dust in the ambient air from re-contaminating the item
- Cooling unit plug-in connection: optimum mobility since the power cord on the unit can be unplugged
- Lid saves energy and creates effective flow turbulence to ensure the item is fully dried
- Stainless steel enclosure, protected against dripping water
- Suitable for use with different stainless steel basket sizes

10 Operating the unit

CAUTION

Hot surfaces

Burns

- Allow the unit to cool down or use suitable gloves when loading/unloading objects.

CAUTION

Too much water in the unit can damage the unit.

- Allow excess water to drip off the basket and the objects sufficiently before drying.
- Empty any objects filled with liquid before drying.

NOTICE

To prevent overheating of the unit:

- Do not use any other lid than the one supplied with the unit.
- Make sure that the air inlets are not blocked.
- The wire mesh on the bottom of the tank should not be covered more than 70%.

NOTICE

To prevent stain formation, rinse the objects thoroughly in DI water before drying.

✓ The power cord has been connected.

✓ The objects to be dried have been rinsed.

1. Allow the excess water to drip off the objects or the stainless steel basket.
2. Place the objects on the grid inside the tank, or hang them in the tank in a stainless steel basket.
   ⇨ **NOTE! The diameter of the objects must not be smaller than the mesh size of the wire mesh.**
3. Replace the supplied lid.

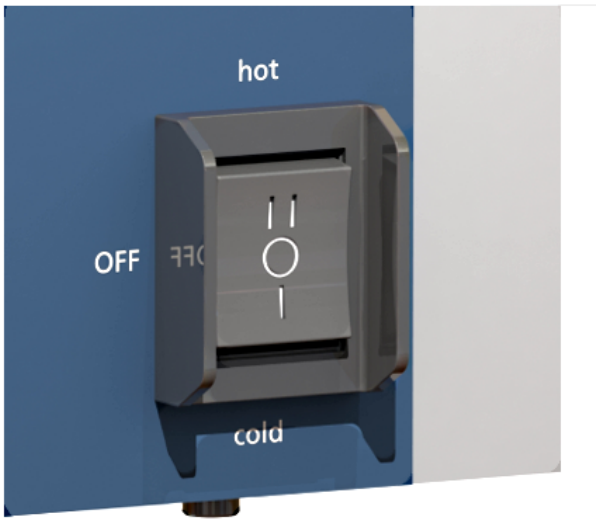

4. To dry with hot air, set the rocker switch to "HOT".
5. To dry with cold air or cool the objects, set the rocker switch to "COLD".
6. To switch off the unit, set the rocker switch to "OFF".
7. After drying, allow the objects to cool down if necessary and remove them.

➔ The unit is being operated correctly.

11 Maintenance

CAUTION

Faulty power cord

Electric shock or damage to the device

➢ Check the power cord regularly for damage.

NOTICE

To increase the service life of the unit, keep the unit clean and dry.

➢ Clean the unit regularly.

➢ Check the filter for soiling regularly, and change or clean it as necessary.

11.1 Cleaning the unit

✓ The power cord is unplugged.

✓ The unit has cooled down.

1. Clean any dust residue on the wire mesh using suction.
2. Remove other residue on the wire mesh with a damp cloth.
3. Remove any residue on the tank with a damp – but not wet – cloth.

➔ The unit has been cleaned.

11.2 Changing or cleaning the dust filter

NOTICE

To prevent dust particles getting onto the objects to be dried, clean or change the dust filter if it is soiled.

The Elma Dry 300 model has 2 dust filters.

✓ The power cord is unplugged.

✓ The unit has cooled down.

1. Turn the unit over so that the dust filter on the underside is easily accessible.
2. Remove the cover by pulling it off.

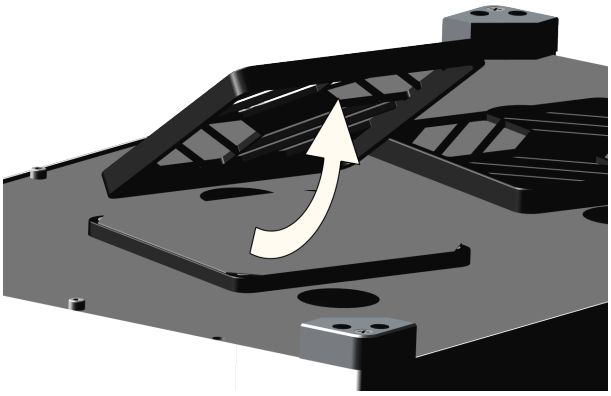

3. Remove the dust filter.

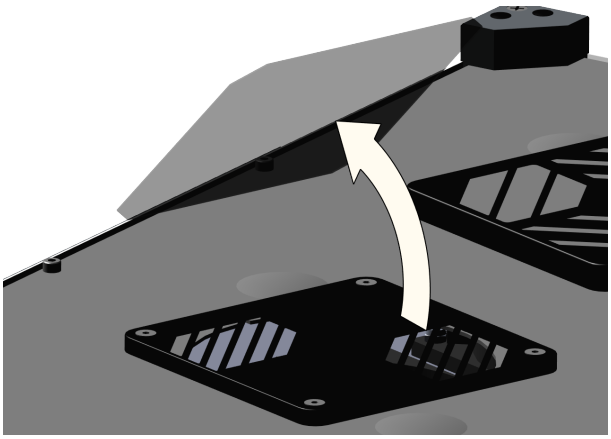

4. Insert a new dust filter, or clean and replace the old dust filter.
5. Replace the cover.
6. Turn the unit back to the upright position.

➔ The dust filter is ready for use again.

12 Troubleshooting

NOTICE

Repairs and maintenance work that require the unit to be opened may only be carried out by authorised electrical specialists.

➢ Contact the manufacturer or supplier.

Fault	Possible cause	Resolution
The blower is not working.	Blower faulty, or blocked with dirt	• contact the manufacturer.
The objects are dirty after the drying process.	Soiled dust filter	• Change or clean the dust filter.
Heating and/or blowing do not work.	Unit faulty	• contact the manufacturer.
The unit becomes unusually hot (> 100 °C).	Over-temperature fuse faulty	• contact the manufacturer.

Table 2: Troubleshooting

In case of faults that cannot be fixed, contact the manufacturer's Technical Support.

Technical support:

Tel.: +49 (0)7731 / 882-280

Fax: +49 (0)7731 / 882-253

support@elma-ultrasonic.com

13 Disposal

NOTICE

To dispose of the unit, take it to a metal or electronics recycling facility or send it back to the manufacturer.

List of figures

Illustration 1 Product contents Elma Dry 7
Illustration 2 Front of Elma Dry 8
Illustration 3 Rear of Elma Dry 9
Illustration 4 Dryer tank of Elma Dry 10

List of tables

Table 1 Meaning of the signal words 11
Table 2 Troubleshooting 18